Pre-Calc
Polar Worksheet

Name Key 2/9/17
Date_____ Per ____

Convert to rectangular

1. $\left(12, \frac{11\pi}{6}\right) =$ (r, θ)

$x = 12\cos\frac{11\pi}{6} = 12\left(\frac{\sqrt{3}}{2}\right) = 6\sqrt{3}$

$y = 12\sin\frac{11\pi}{6} = 12\left(-\frac{1}{2}\right) = -6$

$(6\sqrt{3}, -6)$

2. $\left(-7, \frac{3\pi}{2}\right) =$

$x = -7\cos\frac{3\pi}{2} = -7(0)$

$y = -7\sin\frac{3\pi}{2} = -7(-1)$

$(0, 7)$

Convert the ordered pairs to polar form,

3. $(-8\sqrt{3}, 8)$

$r = \sqrt{(-8\sqrt{3})^2 + 8^2} = \sqrt{192 + 64} = \sqrt{256} = 16$

$\theta = \tan^{-1}\left(\frac{8}{-8\sqrt{3}}\right) = \tan^{-1}\left(-\frac{1}{\sqrt{3}}\right)$ $\frac{5\pi}{6}$

$\frac{\pi}{6} = \frac{\frac{1}{2}}{\frac{\sqrt{3}}{2}} = \frac{1}{2}\cdot\frac{2}{\sqrt{3}} = \frac{1}{\sqrt{3}}$

$(16, 5\pi/6)$

4. $(-3, 0)$

$r = \sqrt{9} = 3$

$\theta = \tan^{-1}\left(\frac{0}{-3}\right) = \tan^{-1}(0) = \pi$

$(3, \pi)$

Convert the rectangular equation to a polar equation.

5. $4y + x = 2$

$4r\sin\theta + r\cos\theta = 2$

$r(4\sin\theta + \cos\theta) = 2$

$r = \frac{2}{4\sin\theta + \cos\theta}$

6. $x^2 + y^2 = 7$

$r^2 = 7$

$r = \sqrt{7}$

7. $x = 2y^2$

$\frac{r\cos\theta}{r} = \frac{2r^2\sin^2\theta}{r}$

$\frac{\cos\theta}{2\sin^2\theta} = \frac{2r\sin^2\theta}{2\sin^2\theta}$

$r = \frac{\cos\theta}{2\sin^2\theta}$

Convert the polar equation to a rectangular equation, and sketch the graph.

8. $r = -2\csc\theta$

$\sin\theta \cdot r = \frac{-2}{\sin\theta} \cdot \sin\theta$

$r\sin\theta = -2$

$y = -2$

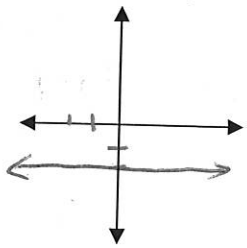

9. $r = 8\cos\theta$

$r^2 = 8r\cos\theta$

$x^2 + y^2 = 8x$

$x^2 - 8x + 16 + y^2 = 16$

$(x-4)^2 + y^2 = 16$

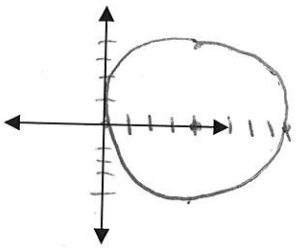

Multiple Choice. Write your answer in the blank.

E 10. The graph of $\theta = \frac{5\pi}{3}$ is a

(A) cardioid (B) limacon with a loop (C) limacon without a loop
(D) circle (E) line

B 11. The graph of $r = 2 + 3\cos\theta$ is a

(A) cardioid (B) limacon with a loop (C) limacon without a loop
(D) circle (E) line

A 12. The graph of $r = 3 + 3\sin\theta$ is a

(A) cardioid (B) limacon with a loop (C) limacon without a loop
(D) circle (E) line

B 13. The graph of $r = \frac{4}{1 + \cos\theta}$ is a

(A) parabola (B) ellipse (C) hyperbola
(D) circle (E) line

Don't worry we didn't cover ellipses yet

Make a table and graph.

14. $r = 3 + 3\sin\theta$

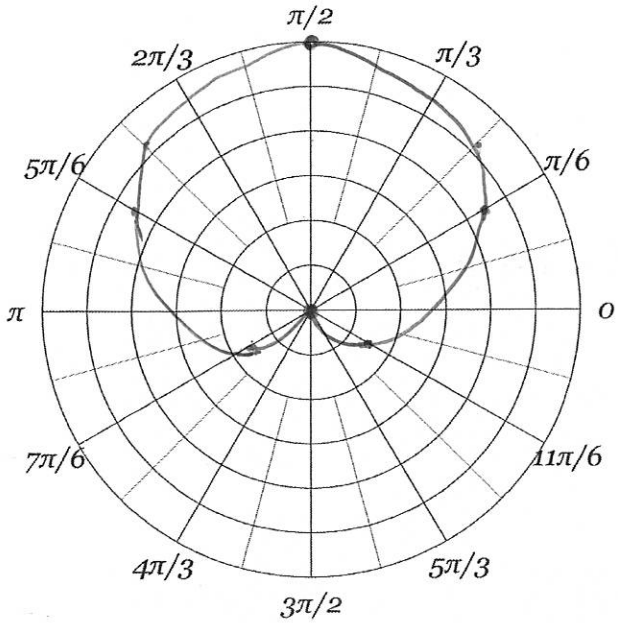

15. $r^2 = 9\cos 2\theta$

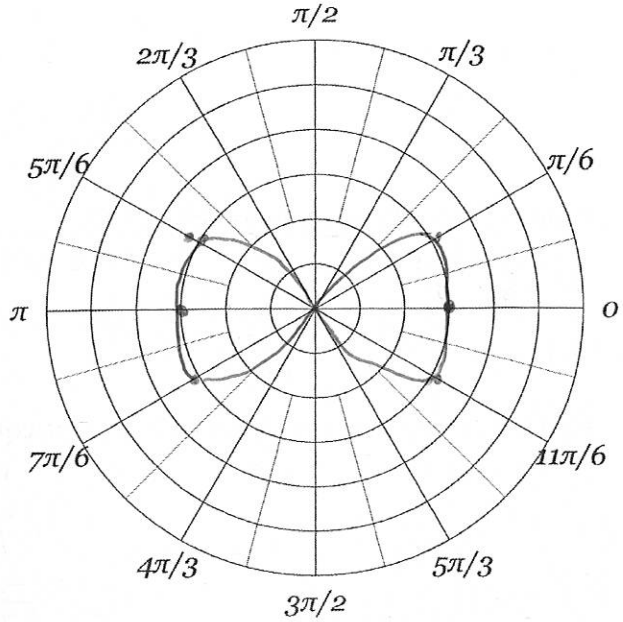

16. $r = 4 - 2cos\theta$

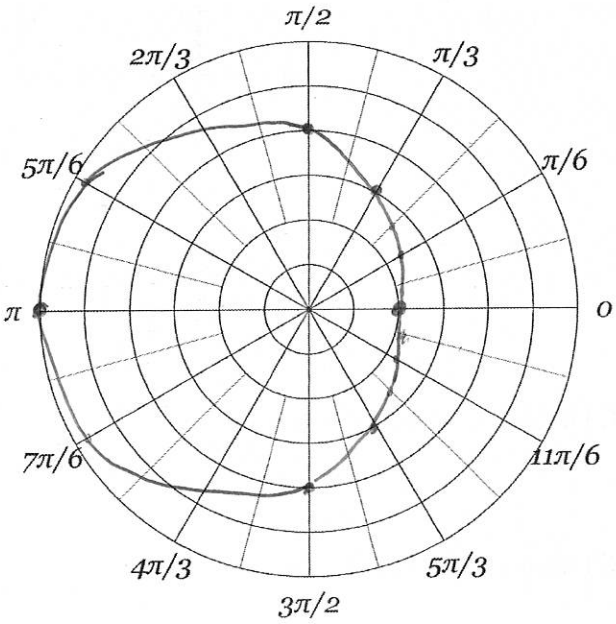

17. $r = 4cos3\theta$